- ☐ 2700 Series
- ☑ APx555
- ☑ APx585 Series
- ☑ APx525 Series
- ☑ APx515

Using APx to test DANTE™ Enabled Devices

by Gus Noelcke

Introduction

The Dante™ protocol allows hundreds of high-quality audio channels to be transported over a single cat 5e or cat 6 Ethernet cable with well-controlled latency and support for redundancy. A growing number of professional audio products—including mixers, microphone preamps, wireless microphones, recording interfaces, amplifiers and powered speakers—now use Dante interfaces, allowing them to be integrated into larger systems over TCP/IP Ethernet networks. The applications for Dante range from connecting a laptop computer to a mixing console for live recording, to building large touring audio systems with hundreds of interconnected devices.

Dante-enabled devices present some unique testing challenges. In addition to a Dante interface, most of these products also contain traditional analog and digital audio interfaces, ADCs, DACs, and loudspeakers that need to be tested through the Dante interface. Audio Precision has developed a solution for testing the audio performance of Dante-enabled products using APx series audio analyzers. This Technote explains how to use APx audio analyzers to test networked audio devices that support Audinate's Dante protocol.

Audio Testing of Dante Devices

A typical Dante-enabled device will have a Dante interface and some combination of audio interfaces that may include analog, AES3 digital, SPDIF digital, or acoustic (in the case of powered loudspeakers). Most audio testing requires stimulus signals to be generated, applied to the device under test (DUT) through an input, and then measured at one or more outputs. In the case of Dante-enabled devices, it will be necessary to apply the stimulus in a stream supplied to the Dante interface and measure the response through one of the audio outputs, or conversely, apply the stimulus to one of the audio inputs and measure the response contained in a stream supplied from the Dante interface as shown in Figure 1.

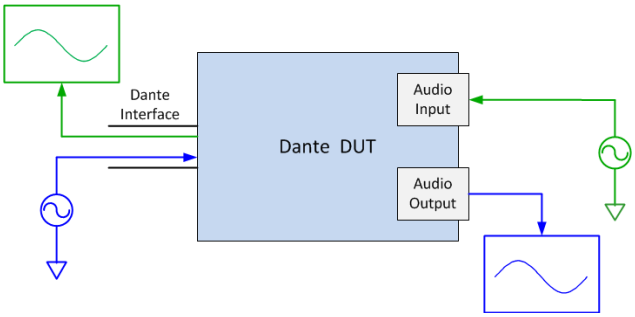

FIGURE 1. DANTE DEVICE TEST

Dante uses Internet Protocol (IP) running over Ethernet to transfer audio streams to and from a device through its Ethernet port. Audio testing as depicted in Figure 2 and Figure 3 require that the APx audio analyzer be able to send and receive test signals over the Dante interface. This can be accomplished using the APx's Audio Stream Input/Output (ASIO) client interface in combination with third-party Dante interfaces designed for Windows PCs.

Focusrite's RedNet™ PCIe card and Audinate's Dante Virtual Soundcard are both compatible with the APx ASIO client capabilities. Either can be installed on the PC hosting the APx500 measurement software, enabling APx to send and receive test signals over Dante interfaces to conduct a wide range of audio measurements.

There are classes of products, such as signal processors, where there may be a need to test by sending a stimulus into the device's Dante Receive Stream and measuring the results in the device's Dante Transmit Stream. APx software supports this type of testing as well.

Operation

As shown in Figure 1, there are two directions in which tests can be run: from Dante stream to DUT audio output,

and from DUT audio input to Dante stream. Both modes of operation are described here. Before any test can be run, audio streams must be established between Dante devices in the test setup. Audio streams are configured using the Dante Controller application between one device's Dante transmitter and another device's Dante receiver.

Note that the DUT's audio input or output may be analog, or a digital format such as AES3, SPDIF, MADI, etc.

For Dante audio testing, it is highly recommended that a dedicated Ethernet switch is used to isolate the test setup from normal Local Area Network (LAN) traffic. Most corporate LANs are not configured to properly support IP Quality of Service (QoS). Network congestion can cause dropouts to occur in Dante audio streams, producing inaccurate measurement results.

Dante Stream to DUT Audio Output

Refer to Figure 2 and Figure 3 for this signal path and the two following.

In this signal path, APx generates a test signal and routes it to the RedNet PCIe card [or Dante Virtual Soundcard] via APx's ASIO interface. The RedNet PCIe [or Dante Virtual Soundcard] converts the test signal generated by the APx to a Dante stream and sends the stream to the Ethernet switch. The switch forwards the stream to the DUT's Dante interface. The DUT receives the Dante stream and converts the test signal to either a voltage for an analog output or a properly formatted digital stream for a digital audio output. The DUT audio output is connected to an APx analyzer input (analog or digital as appropriate), where the APx measures the signal and presents the measurement results.

DUT Audio Input to Dante Stream

In this signal path, APx generates a test signal and routes it to its generator output (analog or digital as appropriate). The APx generator output is connected to the DUT's audio input. The DUT receives the test signal on its audio input, performs signal processing (if any), converts the signal to a Dante stream and sends the stream to the Ethernet switch. The switch forwards the Dante stream to the RedNet PCIe [or Dante Virtual Soundcard] in the PC. The RedNet PCIe [or Dante Virtual Soundcard] receives the Dante stream and converts it to an ASIO stream which is sent to APx via its ASIO interface. APx receives the ASIO stream, performs the measurements and presents the measurement results.

DUT Dante Rx Stream to Dante Tx Stream

In this signal path, APx generates a test signal which is sent over the ASIO interface to the RedNet PCIe [or Dante Virtual Soundcard]. The signal is converted to a Dante stream and forwarded through the switch to the DUT's Dante receiver (Rx). The DUT converts the stream from Dante to a pulse code modulated (PCM) digital stream, performs the signal processing and sends the processed signal through its Dante transmitter (Tx) to the RedNet PCIe [or Dante Virtual Soundcard] Dante stream receiver (Rx). The Dante stream is converted to an ASIO stream which is routed to APx, which analyzes the signal contained in the ASIO stream and presents the measurement results.

Dante Audio Test Setups

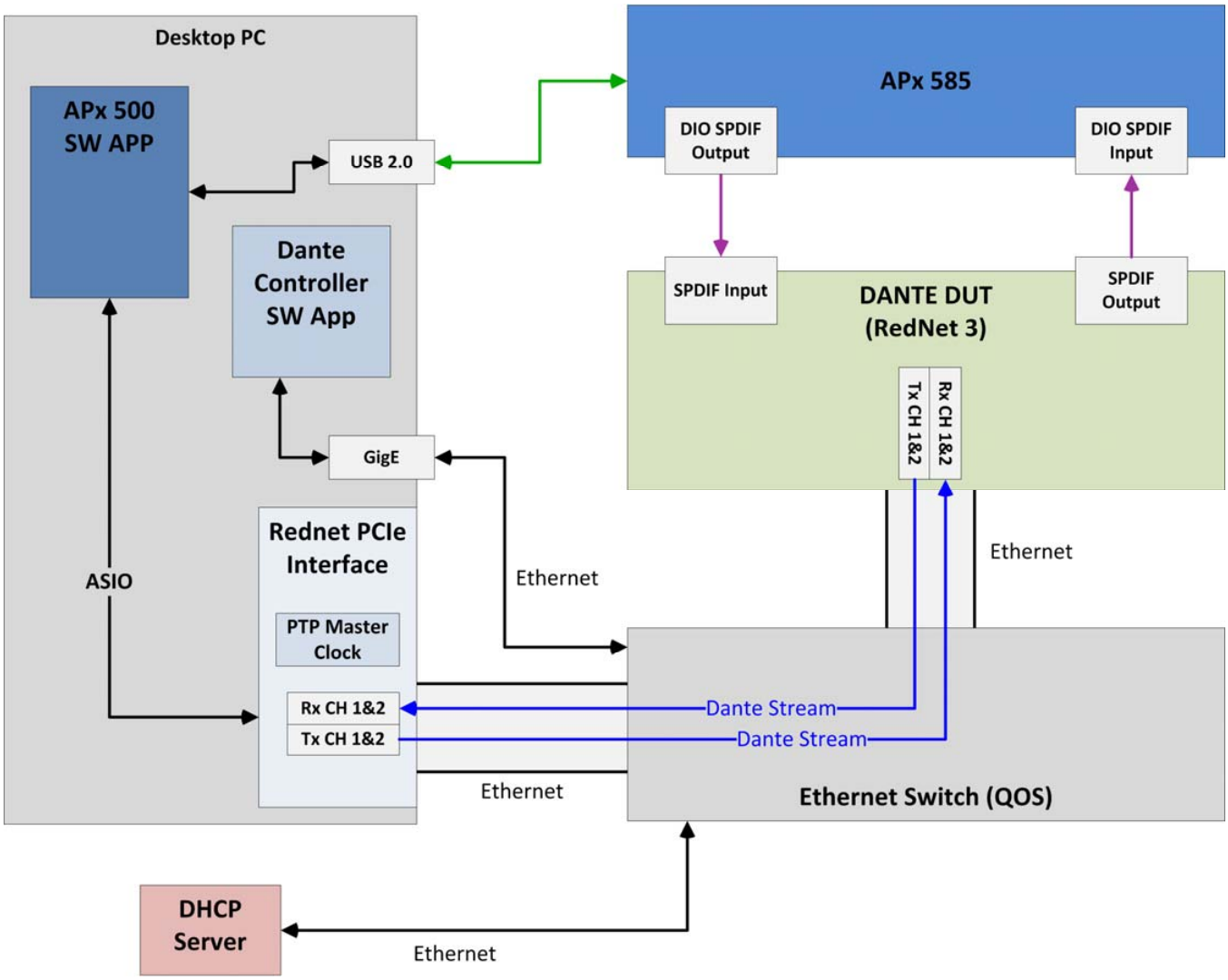

FIGURE 2. TEST SETUP A: PTP MASTER CLOCK PROVIDED BY REDNET PCIE CARD

Test Setup A

Dante-enabled devices use the IEEE 1588 Precision Time Protocol (PTP) across the network to synchronize local clocks to a master clock for sample-accurate time alignment. A PTP Master Clock must be available to the Dante-enabled devices on the network.

We will look at two test setups for APx/Dante testing.

Figure 2 shows Test Setup A, which uses the Focusrite RedNet PCIe card as both the Dante interface and as the PTP Master Clock source. This setup is useful in situations where neither the network nor the DUT provide a PTP Master Clock.

The RedNet PCIe is a hardware card that must be installed in the Windows PC that is running the APx500 measurement software. Software drivers for the RedNet PCIe card must be installed as well.

The DUT used in this Technote is the Focusrite RedNet 3, using its digital SPDIF inputs and outputs as the audio connections. The RedNet Control software application is used to configure the RedNet 3 over the Ethernet.

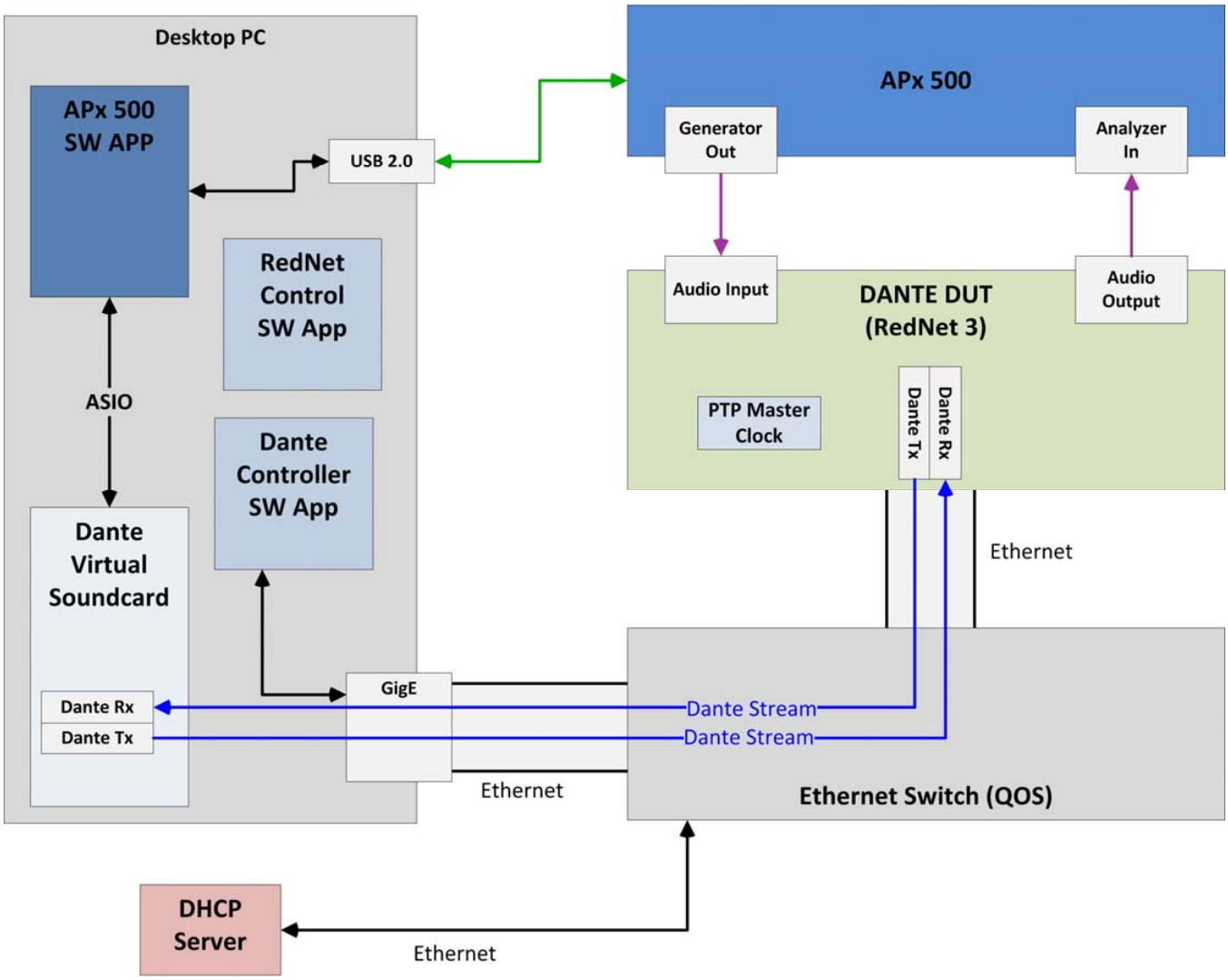

FIGURE 3. TEST SETUP B: PTP MASTER CLOCK PROVIDED BY DUT (REDNET 3).

Test Setup B

Figure 3 shows Test Setup B, which uses a software application from Audinate called Dante Virtual Soundcard as the Dante interface. Dante Virtual Soundcard must be installed on the Windows PC that is running the APx500 measurement software. In Test Setup B, the PTP Master Clock must be found on the network; in our case, the PTP Master Clock is a component of our DUT, the Focusrite RedNet 3.

The DUT used in this Technote is the Focusrite RedNet 3, using its digital SPDIF inputs and outputs as the audio connections. The RedNet Control software application is used to configure the RedNet 3 over the Ethernet.

Key Elements

The key elements of the test system include:

1. A Windows PC host with sufficient processor bandwidth (Intel Core i5/i7 class machines), memory (4 GB or more), a compatible operating system and at least a 100 Mbit Ethernet interface (preferably 1 Gbit).
2. An Audio Precision APx audio analyzer and APx500 measurement software (version 4.1 or later). For bit-accurate transfer when APx is outputting the Dante stream, the APx must be fitted with the Advanced Master Clock (AMC) option, and the DUT

Word Clock Out must be connected to the AMC Sync In using a BNC cable. See page 9 for more information.

3. [Test Setup A only]. A Focusrite RedNet PCIe card to provide the PTP master clock source for Dante devices in the test setup, and to provide the ASIO-to-Dante interworking for APx.
4. [Test Setup B only]. The Audinate Dante Virtual Soundcard application, to provide the ASIO-to-Dante interworking for APx.
5. Audinate's Dante Controller software application to configure the interconnection of Dante audio streams available through the network.
6. An Ethernet switch with gigabit Ethernet and support for IP Differentiated Services Code Points (DSCP) QoS, such as the NETGEAR Prosafe GS716T switch that is used for this Technote.
7. A Dynamic Host Configuration Protocol (DHCP) server (usually provided by the company network) to provide IP addresses for the PC, the RedNet PCIe card and the Dante device under test (DUT).
8. A Dante-compatible device to be tested (the DUT). [For Test Setup B, this device or another device on the network must provide the PTP Master Clock.]

Configuring the Test System PC

Configuration of the Test System begins with installation of the necessary components on the PC.

- For Test Setup A, the Focusrite RedNet PCIe card must be installed in a PCIe slot in the PC, and its driver software must be installed according to Focusrite's instructions.
- For Test Setup B, the Audinate Dante Virtual Soundcard must be downloaded and installed on the PC according to Audinate's instructions.

Important Note: Do not install Dante Virtual Soundcard on the PC containing the Focusrite RedNet PCIe. The drivers for Dante Virtual Soundcard and RedNet PCIe will have conflicts, resulting in unreliable operation and dropouts in the audio streams. If Dante Virtual Soundcard is already installed on the PC, uninstall it from the PC prior to attempting to use the RedNet PCIe card. Simply stopping Dante Virtual Soundcard will not alleviate the problems.

- APx must be installed according to instructions given in Audio Precision's APx Installation Guide.
- The Dante Controller application must be downloaded and installed on the PC according to Audinate's instructions.
- If the Focusrite RedNet 3 is used as the DUT (as it is here), install Focusrite's RedNet Control application, which is included with RedNet hardware distribution, or can be downloaded from the Focusrite Web site.

Optimizing the Test PC Performance for Dante

The PC should be configured to prioritize background services over program execution. This configuration is located in **Computer Properties → Advanced System Settings → Advanced tab → Performance → Settings → Advanced Tab → Processor Scheduling section → Adjust for Best Performance of** and choose **Background Settings** as shown in Figure 4.

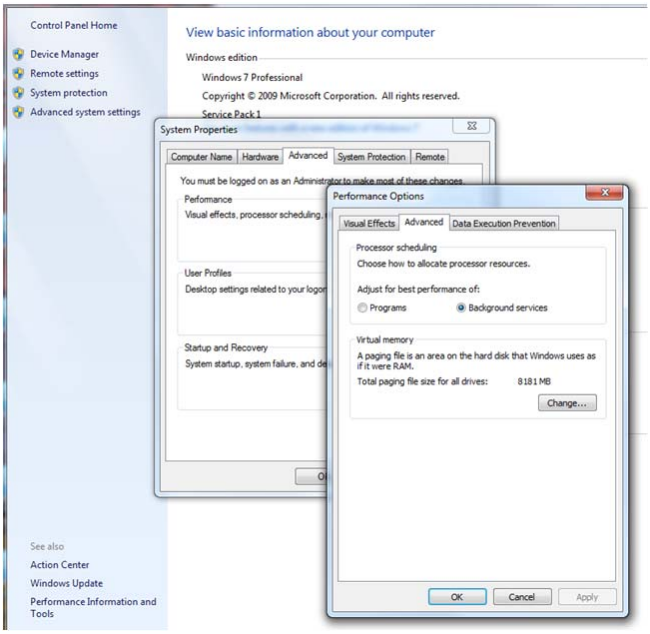

FIGURE 4. SETTING THE PRIORITY OF BACKGROUND SERVICES IN THE PC

Many of the Dante and ASIO software components run as background services in Windows. It is important that these services run with elevated priority to avoid interruptions in the Dante streams.

Dante and APx both require strong real-time performance that can be adversely affected by PC Power Management

settings that are optimized for energy savings. The test PC's power plan should be adjusted for maximum performance of the computer. To check or adjust power settings go to **Control Panel → System and Security → Power Options.** Select the **High Performance** power plan. Next click on **Change Plan Settings** for the selected plan then select **Change Advanced Power Settings**.

- **Hard disk:** Set to never turn off the hard disk
- **Processor Power Management**
  - Set **Minimum Processor State** to 100%
  - Set **Maximum Processor State** to 100%
  - Set **System Cooling Policy** to Active
- **Multimedia Settings**
  - **When sharing media:** Prevent Idling to Sleep
  - **When playing video:** Optimize Video Quality

Proper configuration of the Test PC's Ethernet adapter will minimize Dante latency and dropouts. In particular, Green Ethernet, Flow Control and Interrupt Moderation settings can negatively affect Dante traffic and cause excessive latency. To adjust these parameters go to **Control Panel → Network and Sharing Center → Change Adapter Settings → Local Area Connection → (right click) → Properties → Configure → Advanced. Check/Adjust** the settings as follows:

- **Flow Control:** Set to Disabled
- **Link Speed Battery Saver:** Set to Disabled
- **Green Ethernet or Power Management:** Set to Disabled
- **Interrupt Moderation:** Set to Optimize Performance (not to minimize CPU load)

These settings will vary depending upon the age of the PC and the manufacturer of the Ethernet chip used in the computer. Not all systems will have all of these settings.

Connecting and Configuring the Ethernet Switch

The Ethernet switch should be a managed switch that supports IP Differentiated Services Quality of Service, also known as DiffServ. Dante carries real-time audio signals and is typically configured with small buffers to minimize transmission latency. This means that Dante's IP packets must be delivered with minimum latency, because if they arrive too late there will be interruptions to the audio signals carried by Dante. Dante uses DiffServ to prioritize its traffic as Explicit Forwarding to minimize delay in the network and ensure higher priority for network bandwidth.

For the preparation of this Technote a NETGEAR ProSafe GS716T Ethernet switch was used.

Test Setup A

For Test Setup A, both the RedNet PCIe Ethernet port and the PC's standard Ethernet port should be connected to the Ethernet switch with Cat 5e or Cat6 cable.

The RedNet PCIe Ethernet port is not available to the PC to use for general Ethernet traffic, so it is important to also connect the PC's Ethernet port to the switch so that Dante Controller can configure the Dante devices on the network.

Test Setup B

For Test Setup B, all Ethernet communication passes through the PC's Ethernet port, which must be connected to the Ethernet switch.

DHCP considerations

The DUT's Ethernet port must also be connected to the Ethernet switch, and it is important that the switch is connected to a DHCP server to assign IP addresses to the DUT, and the PC Ethernet Port. It is possible to forgo the DHCP server and configure all of the IP interfaces statically, but this approach makes test configuration more complex, especially if multiple DUTs are substituted in and out of the test setup. Configuration of Static IP addresses is not covered in this Technote.

Configuring QoS on the NETGEAR GS716T

This Technote covers configuration of the NETGEAR GS716T switch for Diffserv QoS. Many other Ethernet switches also support Diffserv QoS but methods for configuration vary. Consult your switch's manual and tutorials for instructions.

In its default configuration, the NETGEAR GS716T switch will allow Dante traffic to pass, but it is not configured for DiffServ QoS. Enabling QoS through the GS761T's web interface is straightforward.

Log into the switch's Web UI and on the main page choose the QoS tab and observe the Class of Service (CoS) Configuration page. Set the CoS Configuration to Global and the Global Trust Mode to DSCP as shown in Figure 5 and press

the Apply button at the lower right corner of the window. The default DSCP to queue mapping parameters in the GS716T are appropriate for properly prioritizing Dante streams. See Figure 5.

By default, the GS716T uses weighted round-robin scheduling of its queues. It is recommended that this be changed to strict priority queueing, where the higher priority traffic always gets serviced first and the lower priority traffic gets delayed until no higher priority traffic is queued. Strict priority queueing maximizes the amount of bandwidth available to high priority traffic while minimizing its delay variation.

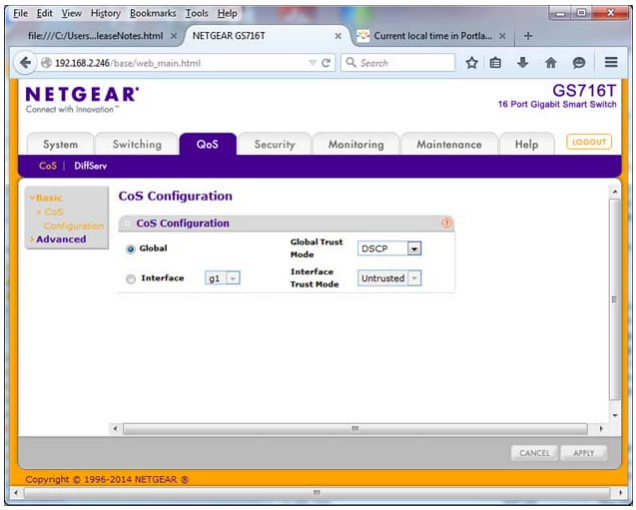

FIGURE 5. ENABLING DSCP QOS ON THE GS716T

To configure strict priority queueing on the GS716T, select the QoS Tab in the main window, CoS Configuration in the bread crumb trail and then Advanced in the menu in the upper left corner of the CoS configuration pane. Chose Interface Queue Configuration from the Advanced menu. Select the check box in the upper left corner of the table to select all the interfaces. Select the Queue ID to be 3 and select schedule type to be Strict as shown in Figure 6, and click the APPLY button.

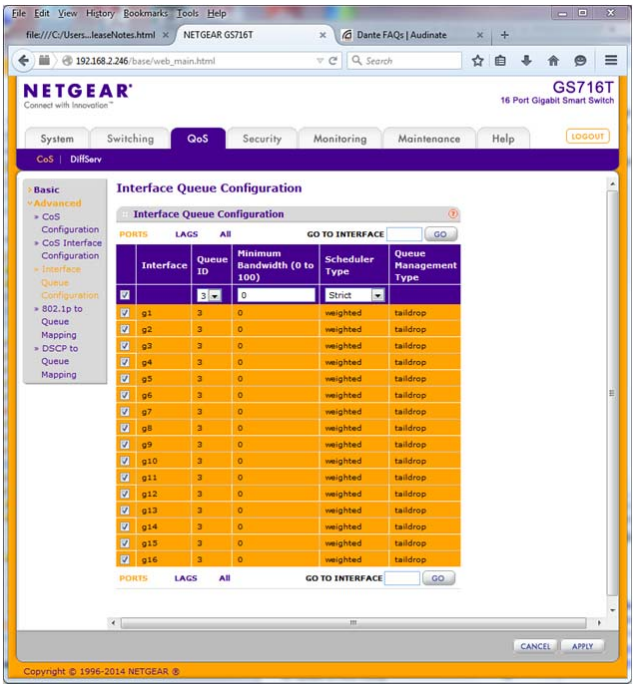

FIGURE 6. ENABLING STRICT PRIORITY QUEUING ON THE GS716T

After it finishes configuring Queue 3 for strict priority, select all of the interfaces, select Queue ID 2, select the scheduler type as Strict and then press the APPLY button. The queues used by Dante high-priority traffic have now been set to strict priority, and the switch configuration is complete.

Configuring the APx

Start by connecting the appropriate APx generator outputs to the DUT's audio inputs and the DUT's audio outputs to the appropriate APx analyzer inputs. For this Technote, an APx585 audio analyzer is used, with a Focusrite RedNet 3 audio interface as the DUT. The APx analyzer's SPDIF inputs and outputs are connected to the RedNet 3 SPDIF inputs and outputs. The overall test setup is shown in Figure 2 and Figure 3. Note that we could test analog inputs or outputs with a similar setup.

The instructions for configuring the APx are:

1. Apply power to the APx and the rest of the test system.
2. Run the APx500 software application on the PC. Make sure that the APx analyzer is running in Sequence Mode.
3. In the APx application, go to the APx Signal Path Setup by clicking on one of the measurements in

the Signal Path Setup. Configure the Output Connector to be Digital Unbalanced and confirm the sample rate is set to 48000. Configure the Input Connector to be ASIO. For Test Setup A, choose RedNet PCIe as the ASIO device, as shown in Figure 7. [For Test Setup B, choose the Dante Virtual Soundcard as the ASIO device, as shown in Figure 8.]

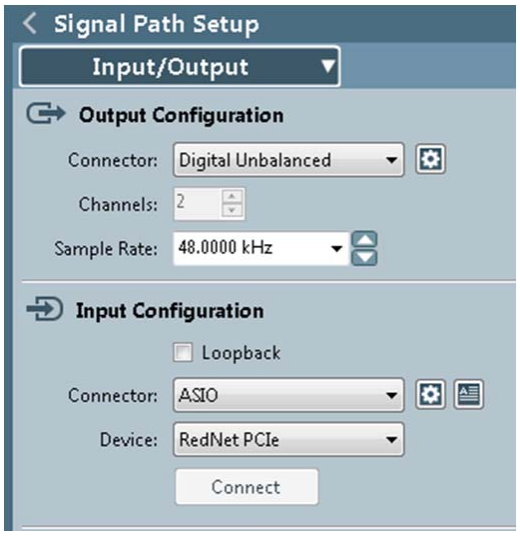

FIGURE 7. APX SIGNAL PATH SETUP FOR REDNET PCIE

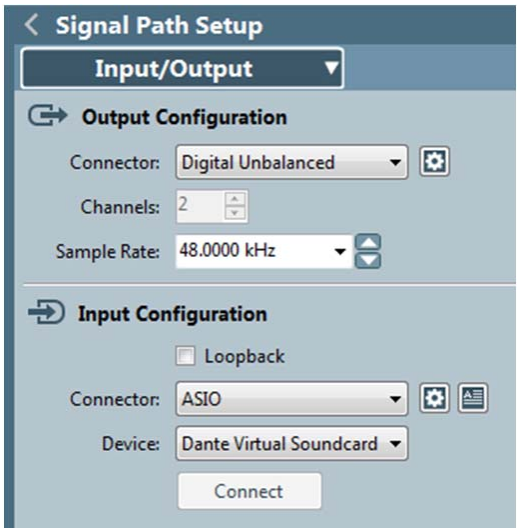

FIGURE 8. APX SIGNAL PATH SETUP FOR DANTE VIRTUAL SOUNDCARD

4. Configure the APx ASIO settings by clicking on the gear icon next to the Connector dropdown in the Input Configuration section of Signal Path Setup. Select Input Channels 1 and 2 from the left column and click the **Add** button to assign them to APx Input Channels 1 and 2. If you also plan to test using Dante streams output from APx, select the Output Channels tab and follow the same steps as the Input Channels tab. Leave the other settings at default and close the settings panel.

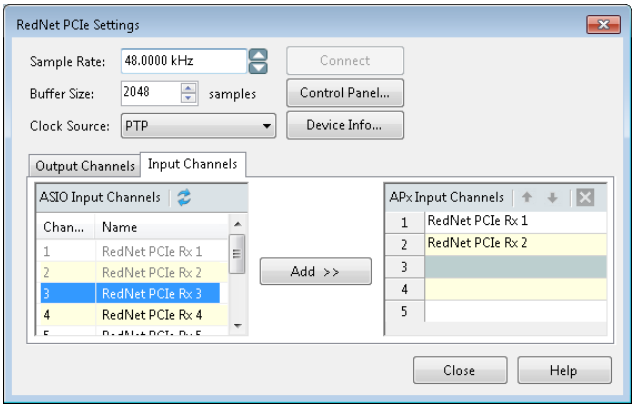

FIGURE 9. APX ASIO INPUT CHANNELS CONFIGURATION FOR REDNET PCIE CARD

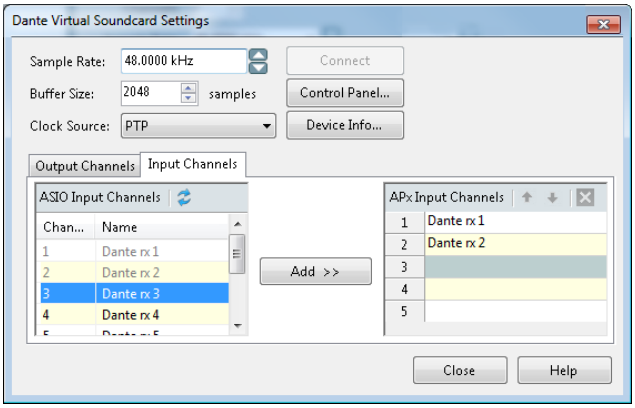

FIGURE 10. APX ASIO INPUT CHANNELS CONFIGURATION FOR DANTE VIRTUAL SOUNDCARD

Configuration of the APx Signal Path is now complete.

Configuring the RedNet 3 Audio Interface

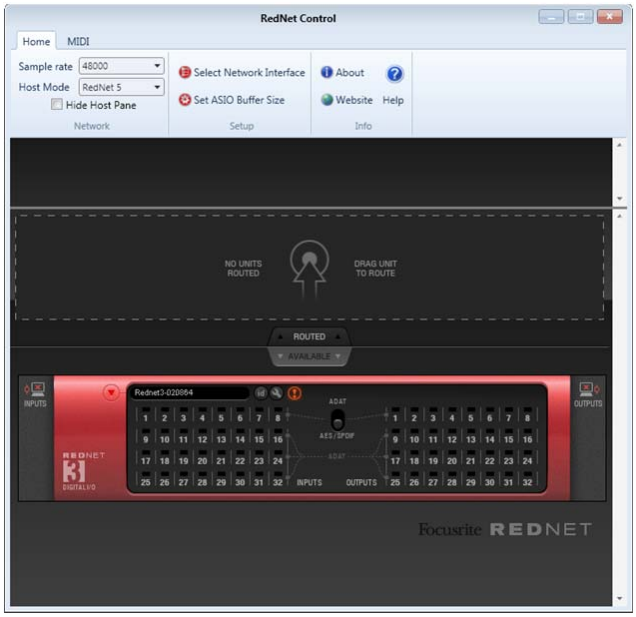

FIGURE 11. REDNET CONTROL APPLICATION (REDNET 3)

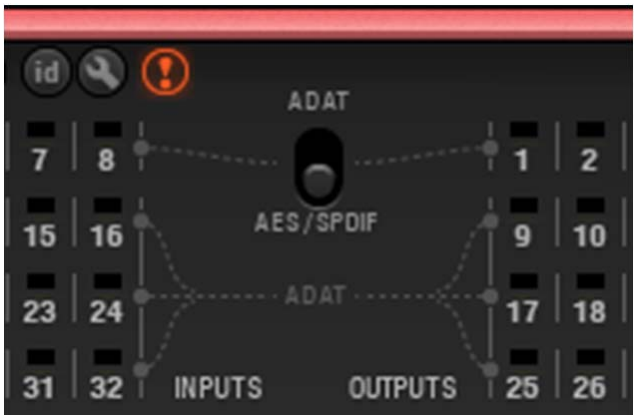

FIGURE 12. DETAIL OF REDNET CONTROL (REDNET 3)

To configure the RedNet 3 audio interface do the following:

1. Be sure the RedNet 3 audio interface is connected to the Ethernet switch and is powered on.
2. Run the RedNet Control application. This is provided with Focusrite RedNet hardware, and is available for download from the Focusrite Web site. It may take several seconds before the RedNet 3 configuration panel appears on the RedNet Control screen.
3. When the RedNet 3 front panel appears on the screen, make sure that the format switch is flipped to AES/SPDIF (not ADAT), as shown in Figure 11 and in the detail in Figure 12.
4. To synchronize the APx Master Clock to the DUT, the APx must be fitted with the Advanced Master Clock (AMC) option, and the DUT Word Clock Out must be connected to the AMC Sync In. Select Ext. In as the APx timebase reference in the Reference/Sync Input section of the Signal Path Setup Clock menu. This provides sample rate synchronization and bit-accurate data transfer. If this synchronization configuration is not possible, see 6 below.
5. To choose SPDIF I/O (rather than AES I/O), click on the small wrench symbol on the RedNet 3 control panel. On the menu check the SPDIF (Inputs 1 & 2) entry. If a check mark appears next to this entry the inputs are configured for the SPDIF inputs on the back of the RedNet 3. If the entry is not checked, then click on the entry to enable SPDIF on inputs 1 and 2.
6. If synchronization as described in 4 above is not possible, you must turn on the Sample Rate Converters (SRC) in the DUT. Click on the AES Inputs SRC entry to display the Channels 1 to 8 SRC settings. Ensure that the “Channels 1 & 2” entry has a check mark. This enables sample rate conversion on the SPDIF input. If the SRC is not enabled there will be periodic dropouts in the measurements because the APx master clock is not synchronized with the Dante Master clock.

This completes configuration of the RedNet 3 Audio Interface.

Configuring the Dante Streams between the local Dante interface and RedNet 3

In order for audio to transit the Ethernet switch between the RedNet PCIe [or Dante Virtual Soundcard] and the DUT (RedNet 3), Dante streams must be configured between the two devices using the Dante Controller Application. To configure the streams do the following:

1. Run the Dante Controller Application on the Windows PC.

2. Select the Routing Tab on the Dante Controller application.
3. [For the Focusrite RedNet PCIe card]. Locate RedPCIe on the list under Dante Receivers and click the small + box that appears next to it. This will open up the channels for RedNet PCIe. See Figure 13.
4. [For the Dante Virtual Soundcard]. Locate the PC (eng-gusn in this example) on the list under Dante Receivers and click the small + box that appears next to it. This will open the channels for the Dante Virtual Soundcard running on the PC. See Figure 14.
5. Locate the RedNet 3 entry at the top of the table in the Dante Transmitters list and click the small + box under it to open the RedNet 3 channels.
6. [For the Focusrite RedNet PCIe card]. Connect the RedNet PCIe channels to the RedNet 3 channels by clicking with the mouse in the square where the two channels intersect. See Figure 13.
7. [For the Dante Virtual Soundcard]. Connect the PC (eng-gusn in this example) channels to the RedNet 3 channels by clicking with the mouse in the square where the two channels intersect. See Figure 14.

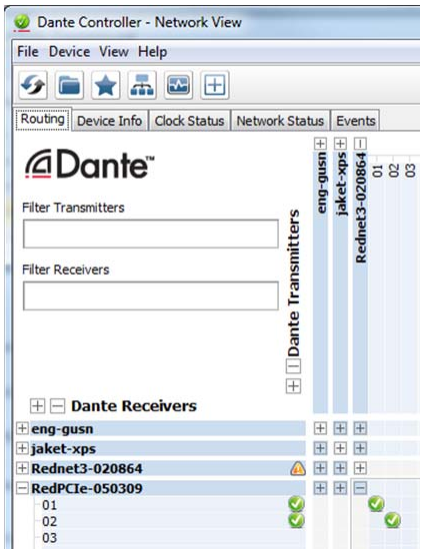

FIGURE 13. REDNET 3 TO REDNET PCIE AUDIO STREAMS (DETAIL)

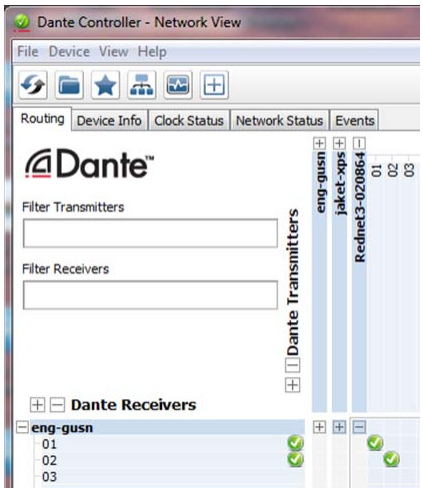

FIGURE 14. REDNET 3 TO ENG-GUSN PC (DANTE VIRTUAL SOUNDCARD) AUDIO STREAMS (DETAIL)

8. Next locate the RedNet 3 in the list of Dante Receivers and click the small + box next to it to open the RedNet 3 receive channels.
9. Locate the RedPCIe [or, for Dante Virtual Soundcard, the PC designation (eng-gusn in this example)] entry in the list of Dante Transmitters at the top of the matrix and click on the small + box next to it open its transmit channels.
10. Click on the squares where RedNet 3 channels 1 and 2 intersect with [or, for Dante Virtual Soundcard, the PC designation (eng-gusn in this example)] channels 1 and 2. This will connect the RedNet 3 Transmit with Dante interface Receive .

The RedNet PCIe [or Dante Virtual Soundcard] and RedNet 3 are now connected bi-directionally over Dante so that the APx can be used to test the RedNet 3's SPDIF inputs and outputs by simply adjusting the signal path in the APx configuration.

Running a Basic Test of RedNet 3 SPDIF Input/Output with APx

In previous steps the APx was configured to send a SPDIF signal to the RedNet 3's SPDIF input and analyze an audio stream received on the RedNet PCIe's [Dante Virtual Soundcard's] channel 1 and channel 2 Dante receivers.

In APx's Signal Path Setup Verify Connections panel, turn on the generator at the default level of –20 dBFS, and observe the spectrum on the APx FFT Monitor. The APx is sending a 1 kHz sine wave from its generator's SPDIF out-

put through the RedNet 3 to the RedNet PCIe [or Dante Virtual Soundcard] in the PC and receiving it for analysis over the RedNet PCIe's [or Dante Virtual Soundcard's] ASIO interface as shown in Figure 2 and Figure 3. This setup is testing the RedNet 3's SPDIF Input to its Dante Transmit (Tx) signal path.

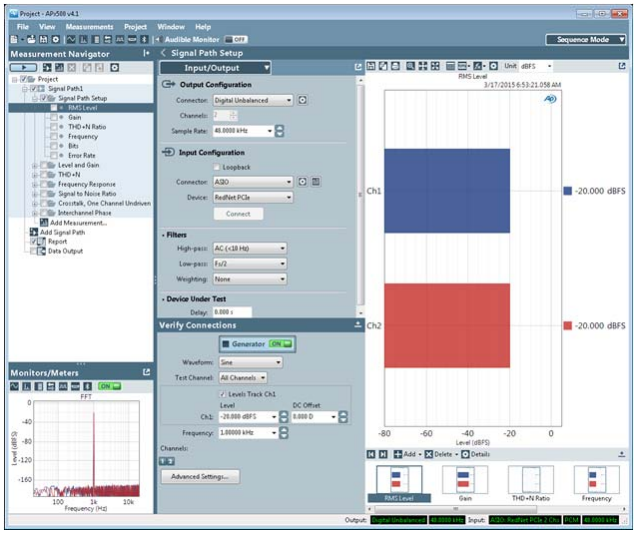

FIGURE 15. APX MEASURING REDNET 3 SPDIF INPUT TO DANTE TX SIGNAL PATH

By simply changing the APx Output Connector from Digital Unbalanced to ASIO and the Input connector from ASIO to Digital Unbalanced, the signal path from the RedNet 3's Dante Receiver [Rx] to its SPDIF Output can be tested as shown in Figure 2 and Figure 3.

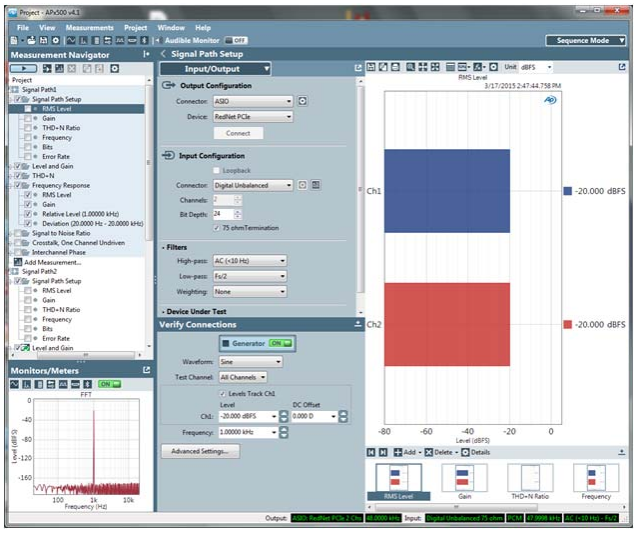

FIGURE 16. APX MEASURING REDNET 3 DANTE RX TO SPDIF OUTPUT SIGNAL PATH

Using these two signal paths all of the APx measurements can be used to fully test the audio performance of the DUT in both directions.

Bit-accurate measurements

The APx digital connections, the APx ASIO client, and the Dante and RedNet network can all provide bit-accurate error-free digital performance when properly configured.

However, bit-accuracy may not be maintained through some DUTS, and it is never maintained when passed through any digital signal processing, including frequency filtering, compression, level adjustment or sample rate conversion.

APx Digital Input

In the case where the digital signal is output from a Dante DUT, the signal is synchronized to the PTP Master Clock on the network or within the DUT. When this signal is presented to the APx analyzer digital input, the APx will synchronize to the input signal and bit-accuracy is maintained through the interface.

APx Digital Output

In the case where the digital signal is output from the APx analyzer, it is synchronized to the analyzer's internal clock. For the APx to synchronize to a Dante DUT, a word clock signal must be provided from the network or the Dante DUT PTP Master Clock, and connected to the APx Sync In connector on the AMC rear panel. In this configuration, the APx internal clock and audio generator will synchronize to the word clock signal and bit-accuracy is maintained through the interface.

> Note: the Advanced Master Clock (AMC) module is required to synchronize the APx to an external clock signal. This module is standard in an APx555, and a hardware option for the APx52x and 58x series.

If it is not possible to synchronize the APx internal clock to the PTP Master Clock when using the APx generator to output to a Dante DUT, sample rate conversion (SRC) must be used at the DUT's digital input to compensate for rate variations. In this case, bit-accuracy will not be maintained. However, the integrity of the audio signal will remain very high, and all audio measurements (except error rate) should be essentially the same.

See paragraph 6 on page 9 to configure a RedNet 3 to use SRC at its digital inputs.

The path from RedNet 3 Dante Rx to RedNet 3 SPDIF Output will be bit exact, as the APx synchronizes to the SPDIF audio stream. No sample rate conversion is necessary. The digital error rate measurement is shown in Figure 17, displaying a zero percent bit error result, confirming that the path is bit exact.

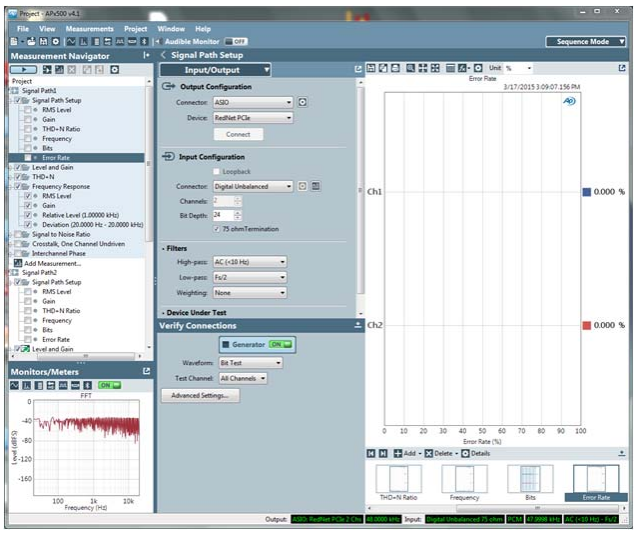

FIGURE 17. APX MEASURING REDNET 3 DANTE RX TO SPDIF OUTPUT DIGITAL ERROR RATE (BIT EXACTNESS)

Summary

This completes an illustration of a Dante network setup for audio test, with examples, using an Audio Precision APx analyzer, a Focusrite RedNet 3, and either a Focusrite RedNet PCIe Dante interface card, or the Audinate Dante Virtual Soundcard. You will likely be using a different Dante interface and a different Dante DUT, but the concept is the same.

References

Audinate Pty. Ltd. audinate.com

Audio Precision. ap.com

Focusrite Audio Engineering, Ltd. focusrite.com

Dante™ is a trademark of Audinate Pty. Ltd.

RedNet™ is a trademark of Focusrite Audio Engineering, Ltd.

国内技术服务:

广州精音电子科技有限公司 AP Technology Limited

13808817355
电话：020-37588772 37588221
地址：广州市越秀区先烈中路76号中侨大厦24楼C单元
电邮：lxc@audioapt.com
网址：audioapt.com

5750 SW Arctic Drive, Beaverton, Oregon 97005 | 503-627-0832
www.ap.com

Copyright © 2015 Audio Precision

XV0420093718